RevNo	Revision note	Date	Signature	Checked

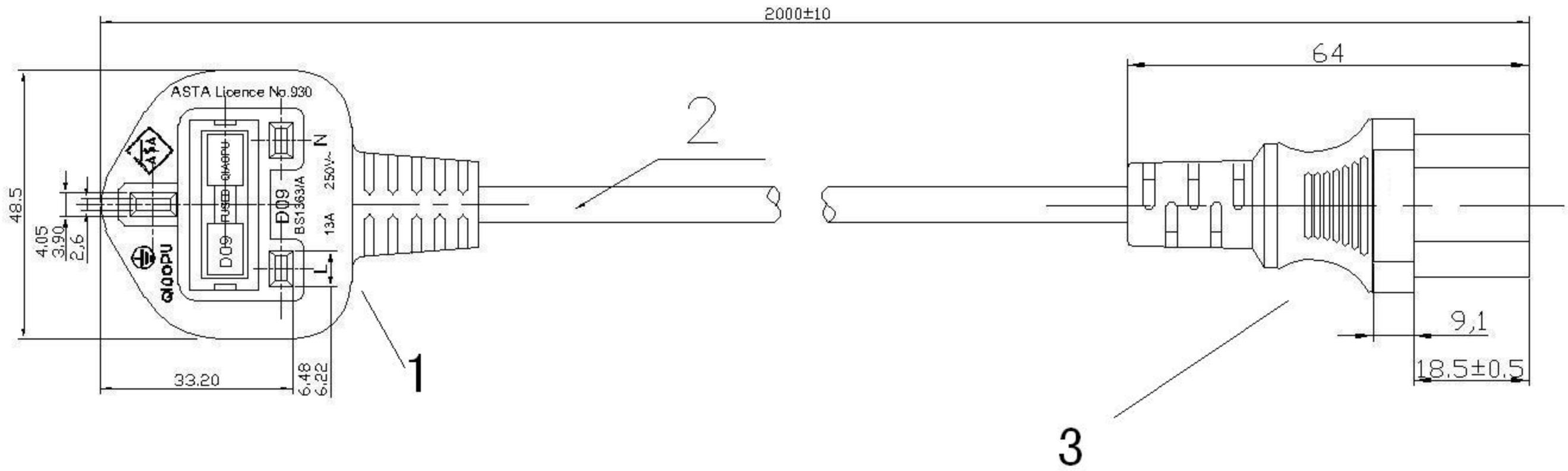

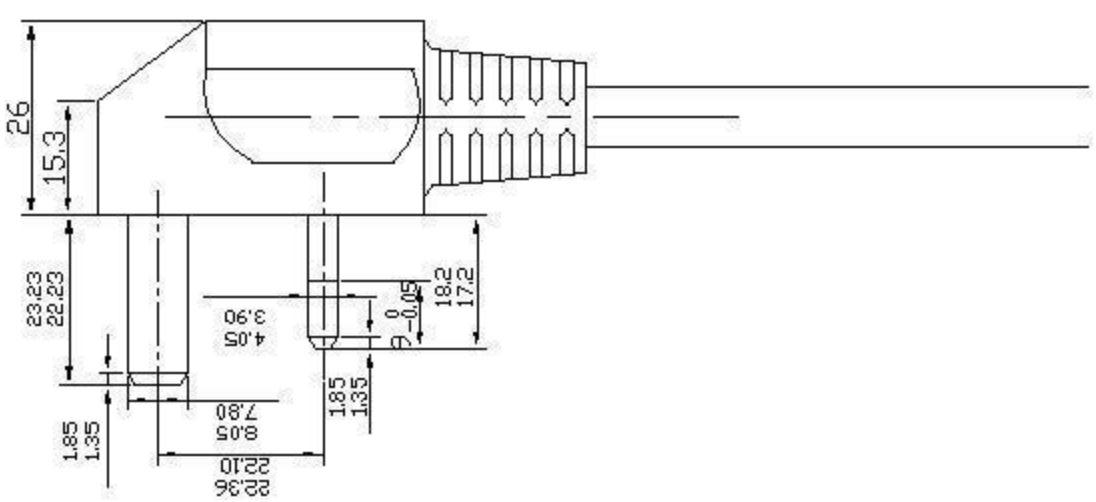

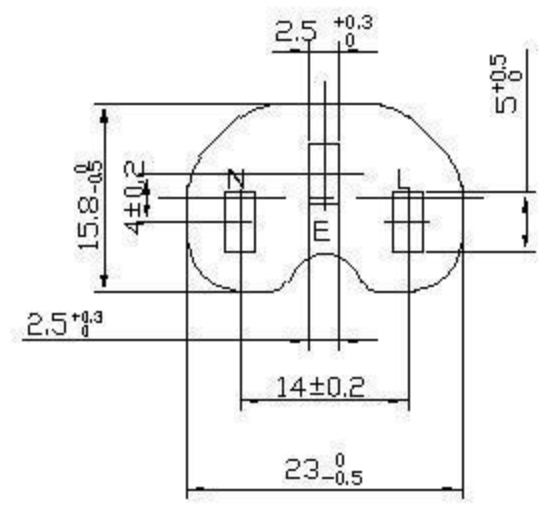

Itemref	Quantity	Title/Name,designation,material,dimension etc	Article No./Reference
3	1	ST3-H 16A 250V	VDE
2	1	Cable: H05RN-F 3G1.0MM2	VDE
1	1	D09 13A 250V~	ASTA

Designed by	Checked by	Approved by-date	Date	File name	Scale
DESIGNED_BY	CHECKED_BY	APPROVED_BY_DATE	DATE	FILENAME	SCALE

[redacted]

PART NO:42 0545

Edition EDITION

Sheet SHEET